Page50: FAN

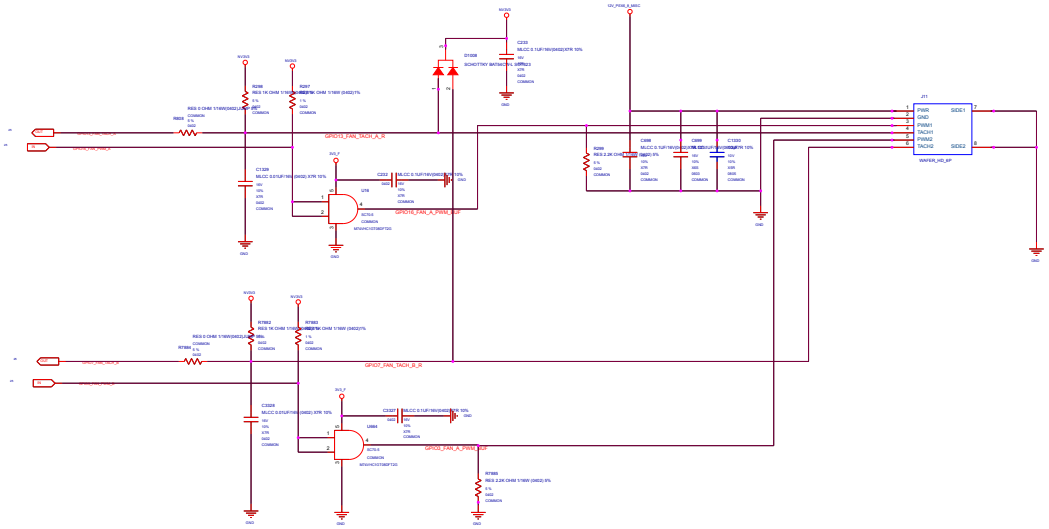

ASSEMBLY	<ASSEMBLY_DESCRIPTION>
PAGE DETAIL	FAN

ALL NVIDIA DESIGN SPECIFICATIONS, REFERENCE SPECIFICATIONS, REFERENCE BOARDS, FILES, DRAWINGS, DIAGNOSTICS, LISTS AND OTHER DOCUMENTS OR INFORMATION (TOGETHER AND SEPARATELY, "MATERIALS") ARE BEING PROVIDED "AS IS". THE MATERIALS
ALL
CONTAIN KNOWN AND UNKNOWN VIOLATIONS OR DEVIATIONS OF INDUSTRY STANDARDS AND SPECIFICATIONS. NVIDIA MAKES NO WARRANTIES, EXPRESSED, IMPLIED, STATUTORY OR OTHERWISE WITH RESPECT TO THE MATERIALS OR OTHERWISE, AND EXPRESSLY DISCLAIMS
ALL
IMPLIED WARRANTIES INCLUDING, WITHOUT LIMITATION, THE WARRANTIES OF DESIGN, OF NONINFRINGEMENT, MERCHANTABILITY OR FITNESS FOR A PARTICULAR PURPOSE, OR ARISING FROM A COURSE OF DEALING, TRADE USAGE, TRADE PRACTICE, OR INDUSTRY STANDARDS.

NVIDIA CORPORATION
2701 SAN TOMAS EXPRESSWAY
SANTA CLARA, CA 95050, USA

NV_PN	600-1G161-BASE-000		
PCB REV	PD1701-A00	PAGE	50 OF 52
BOM REV	A	DATE	21-OCT-2016