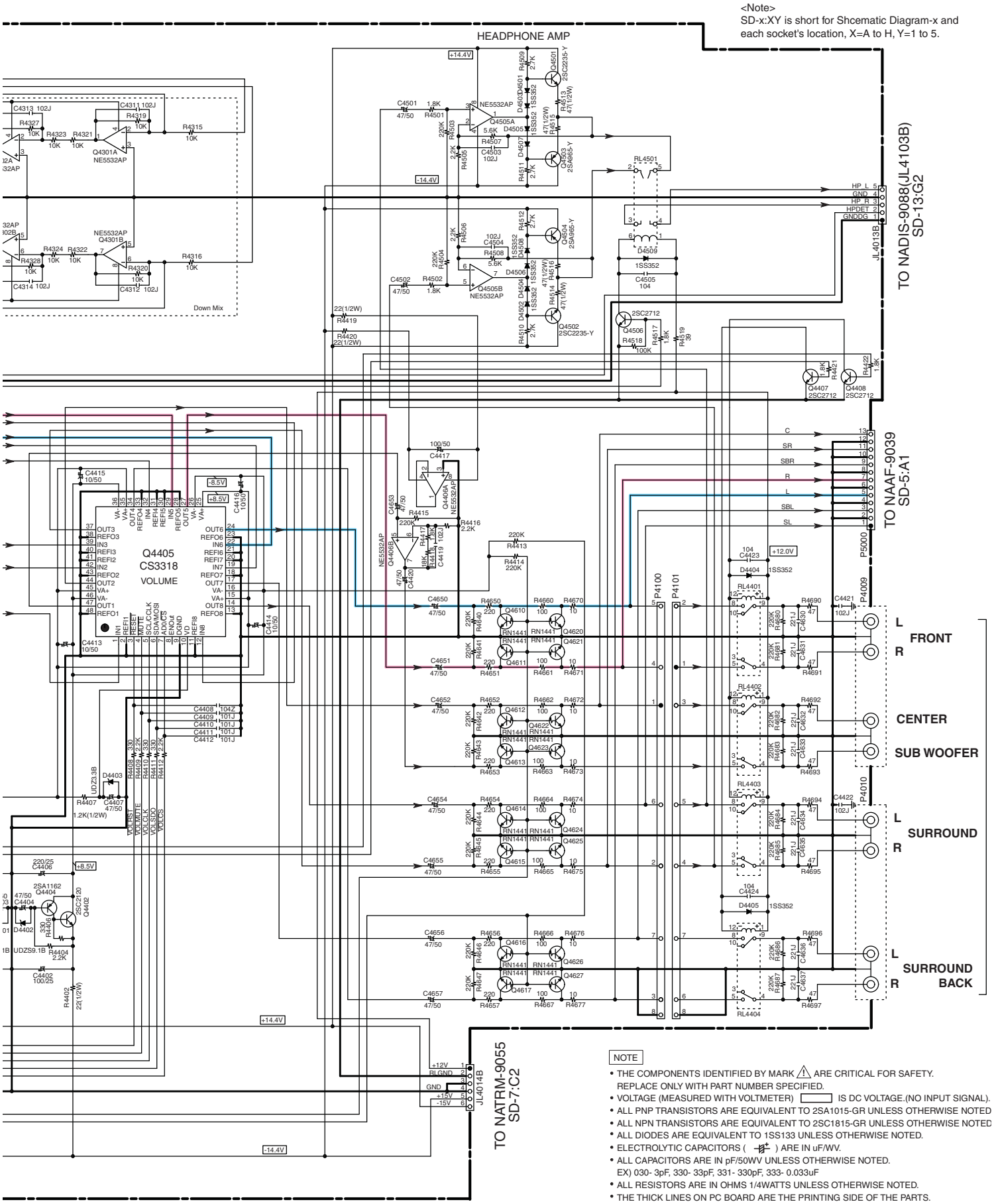

NOTE

- THE COMPONENTS IDENTIFIED BY MARK ⚠ ARE CRITICAL FOR SAFETY. REPLACE ONLY WITH PART NUMBER SPECIFIED.
- VOLTAGE (MEASURED WITH VOLTMETER) ▭ IS DC VOLTAGE.(NO INPUT SIGNAL).
- ALL PNP TRANSISTORS ARE EQUIVALENT TO 2SA1015-GR UNLESS OTHERWISE NOTED
- ALL NPN TRANSISTORS ARE EQUIVALENT TO 2SC1815-GR UNLESS OTHERWISE NOTED
- ALL DIODES ARE EQUIVALENT TO 1SS133 UNLESS OTHERWISE NOTED.
- ELECTROLYTIC CAPACITORS (⊣⊢) ARE IN uF/WV.
- ALL CAPACITORS ARE IN pF/50WV UNLESS OTHERWISE NOTED.
  EX) 030- 3pF, 330- 33pF, 331- 330pF, 333- 0.033uF
- ALL RESISTORS ARE IN OHMS 1/4WATTS UNLESS OTHERWISE NOTED.
- THE THICK LINES ON PC BOARD ARE THE PRINTING SIDE OF THE PARTS.
  EX) ▭ PRINTING SIDE
- CIRCUIT IS SUBJECT TO CHANGE FOR IMPROVEMENT.