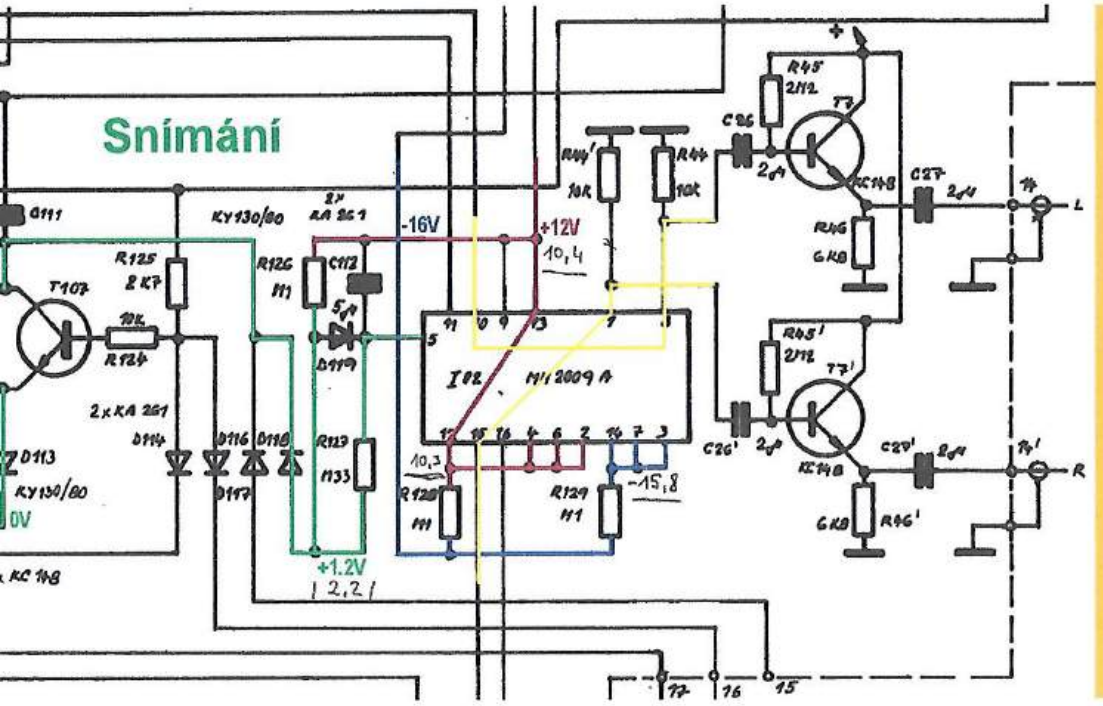
Snímání
G111
T107
R125
2K7
10K
R124
KY130/80
2x KA 261
D113
KY130/80
0V
2x KC 148
D114
D116
D118
D117
R126
M1
C112
5µ
D119
R123
M133
+1.2V
(2,2)
-16V
+12V
10,4
IO2
MH 2009 A
10,3
R128
M1
R129
M1
-15,8
R49'
10K
R44
10K
C26
2µ
R45'
2K2
T7
KC148
R46
6K8
C27
2µ
C26'
2µ
R45'
2K2
T7'
KC148
C27'
2µ
6K8
R46'
L
R
17
16
15

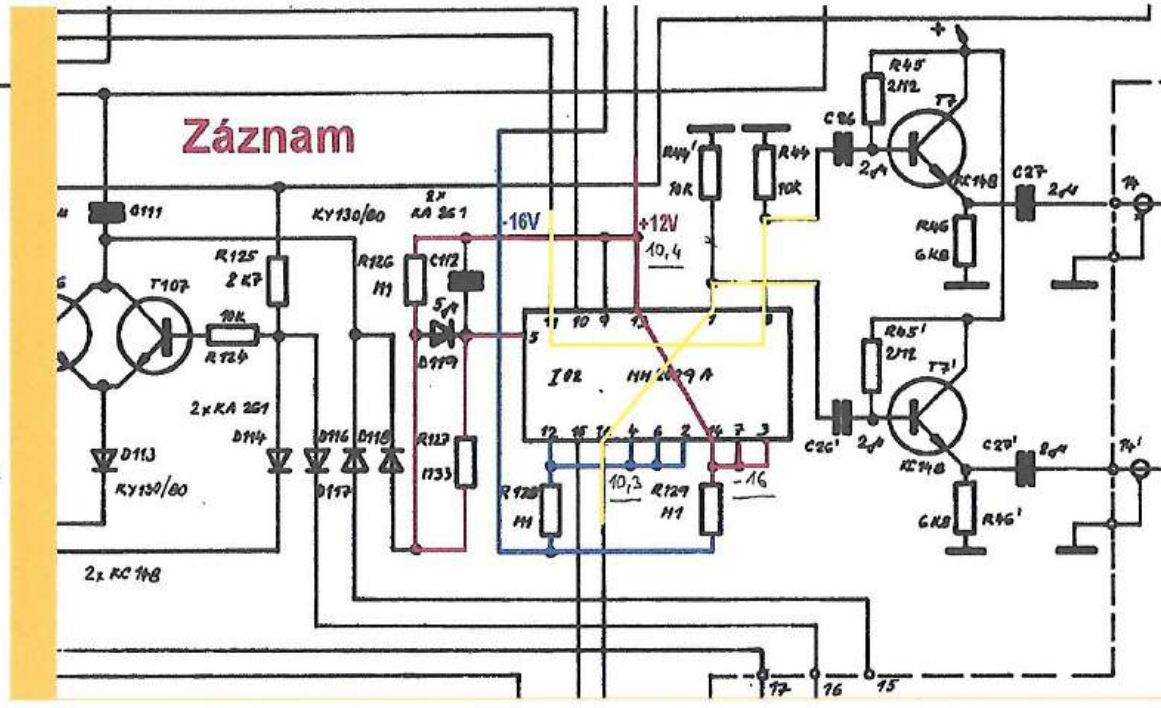
Záznam
G111
T107
R125
2K7
10K
R124
KY130/80
2x KA 261
D113
KY130/80
2x KC 148
D114
D116
D118
D117
R126
M1
C112
5µ
D119
R123
M133
-16V
+12V
10,4
IO2
MH 2009 A
10,3
R128
M1
R129
M1
-16
R49'
10K
R44
10K
C26
2µ
R45'
2K2
T7
KC148
R46
6K8
C27
2µ
C26'
2µ
R45'
2K2
T7'
KC148
C27'
2µ
6K8
R46'
17
16
15