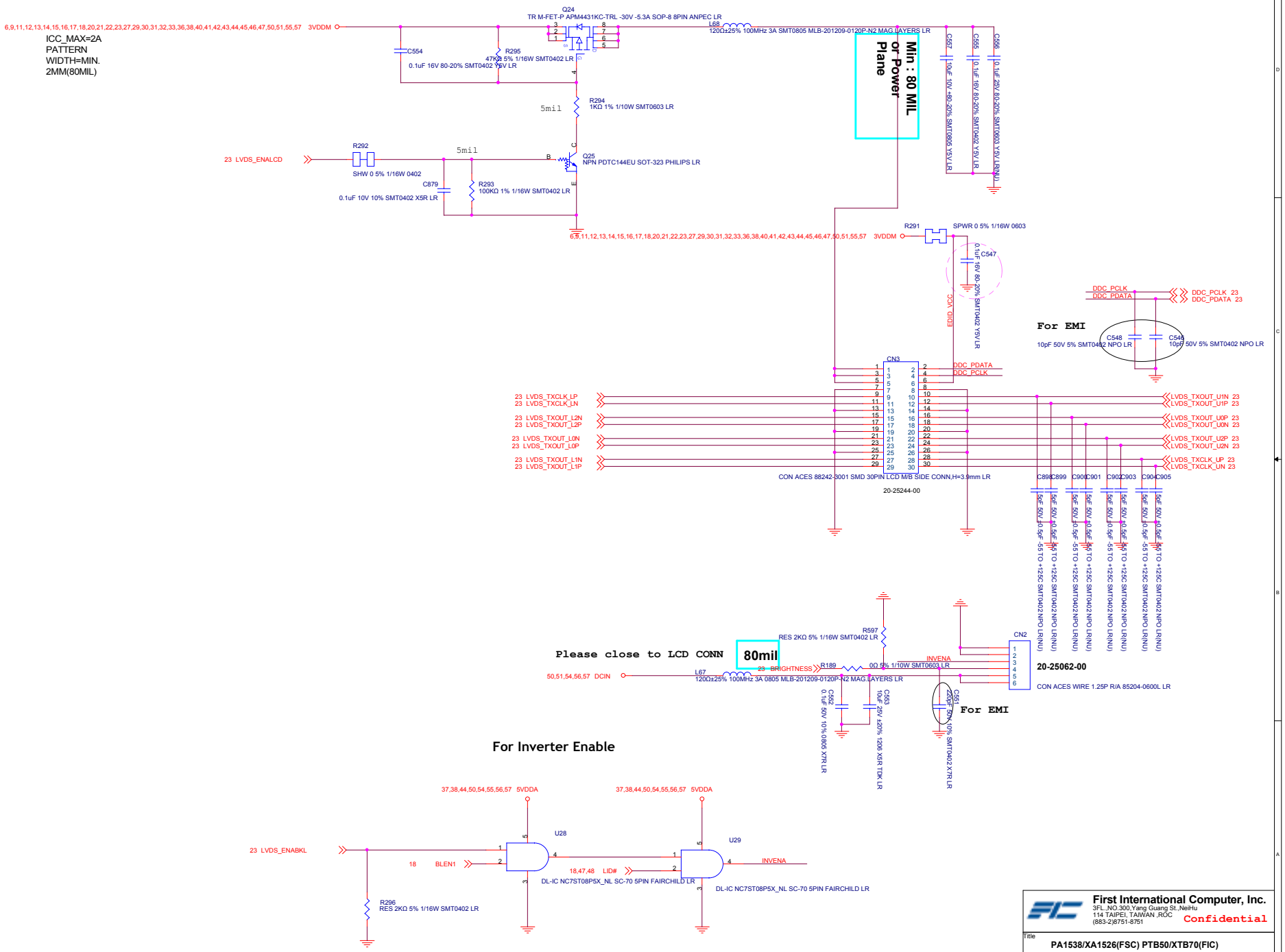

First International Computer, Inc.
3FL.,NO.300,Yang Guang St.,NeiHu
114 TAIPEI, TAIWAN ,ROC
(883-2)8751-8751
Confidential

Title	PA1538/XA1526(FSC) PTB50/XTB70(FIC)	
Size C	Document Number LCD CNN	Rev 0.5
Date: Thursday, October 19, 2006	Sheet 28 of 57	