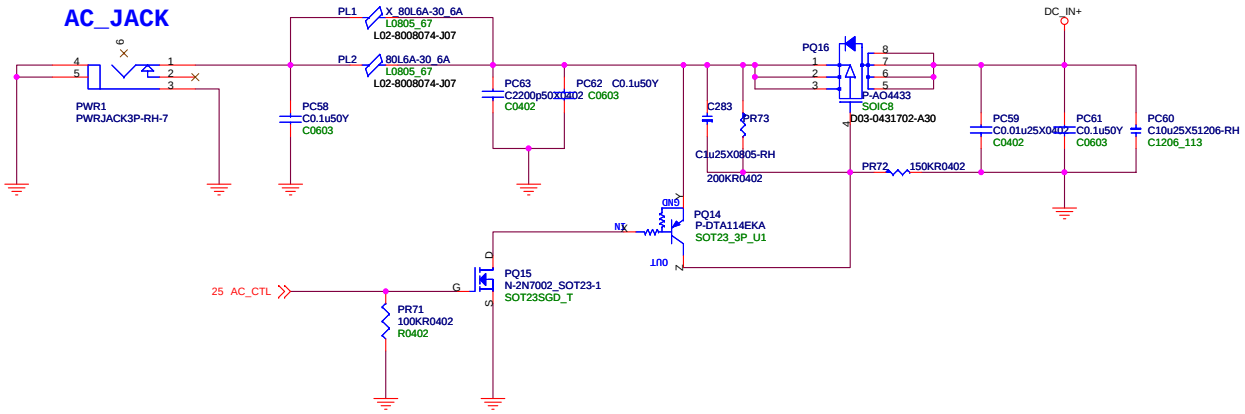

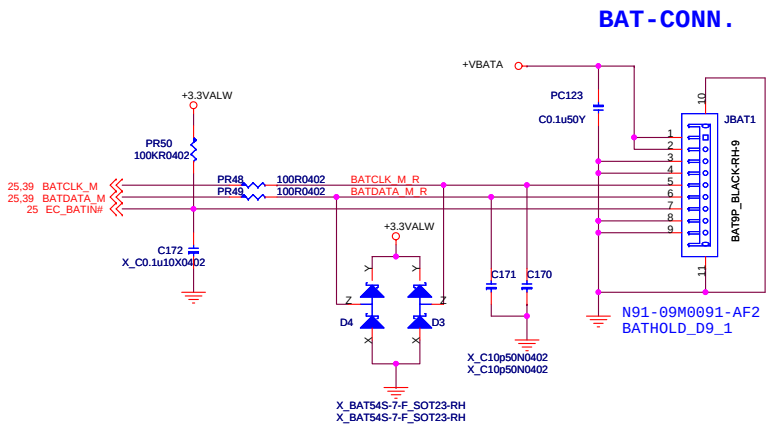

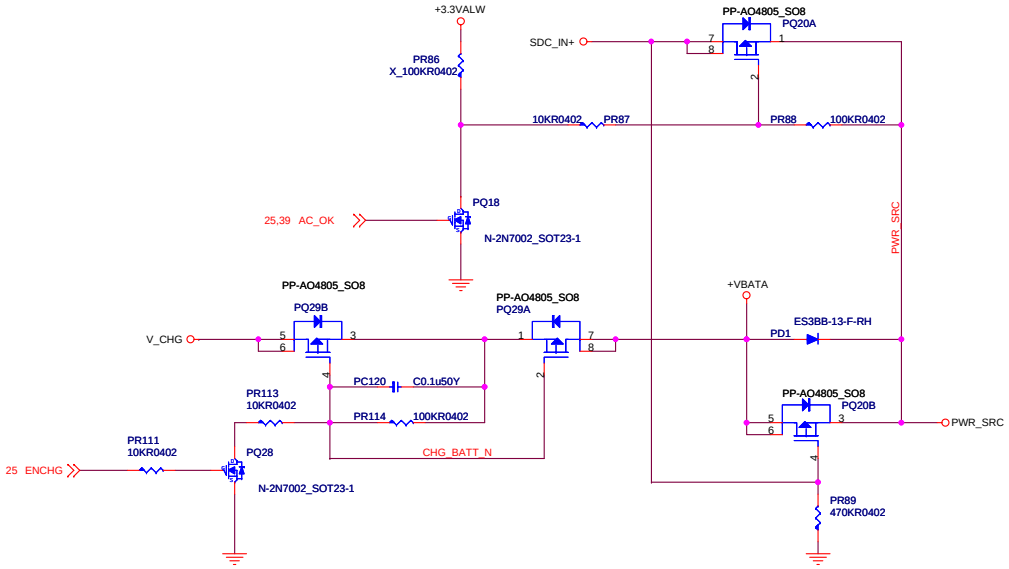

MSI	MICRO-STAR INT'L CO.,LTD	
	MS-168x	
Size: Custom	Document Description: Battery SELECT	Rev: 0A
Date: Monday, February 08, 2010	Sheet 38 of 50	