7. Schematics and PWB's

Large Signal Panel: Power Supply

0211 B1	0282 F11	2502 B5	2507 B7	2521 D1	2526 D6	2547 F9	2563 D8	2568 G8	3502 B4	3507 D3	3522 C5	3527 B6	3540 E8	3545 F9	3552 F8	3562 C8	3567 C9	5500 B4	5560 D8	6501 B6	6522 D2	6561 D8	6566 F10	6581 A8	7540 F9	7562 C9	9502 B4
0212 B1	1500 B3	2503 B6	2508 C7	2522 D6	2527 D7	2559 F10	2564 B9	2569 C8	3503 A4	3508 B4	3523 E6	3528 D6	3541 E8	3546 E8	3558 A9	3563 C9	3568 C10	5501 C4	5561 D10	6502 B5	6523 C5	6562 B8	6567 D8	7515 E7	7541 F8	7564 B10	9503 A7
0213 C4	1515 A7	2504 B7	2515 B7	2523 D7	2528 D2	2560 D8	2565 D8	2580 A9	3504 A4	3519 E7	3524 D6	3529 C5	3542 E9	3547 F9	3559 A9	3564 B9	3569 F8	5502 C4	5562 B8	6503 B6	6540 F9	6563 C8	6569 F8	7520 D2	7542 F8	7580 A8	9504 C10
0231 B1	2500 B3	2505 B2	2516 B7	2524 D6	2540 E9	2561 D9	2566 C9	3500 C2	3505 B4	3520 F2	3525 E5	3530 C5	3543 E10	3548 F9	3560 B9	3565 A9	3570 C10	5520 B7	5563 D9	6520 E1	6541 E8	6564 C8	6570 G7	7521 C6	7560 A10	9500 B2	9520 C7
0251 E11	2501 B5	2506 B6	2520 F2	2525 E6	2542 E9	2562 B8	2567 B10	3501 D2	3506 C3	3521 E2	3526 D6	3531 D2	3544 F10	3549 D10	3561 C8	3566 F8	3580 A8	5521 C7	6500 B5	6521 D7	6560 D8	6565 A10	6580 A8	7522 C6	7561 D9	9501 C2	

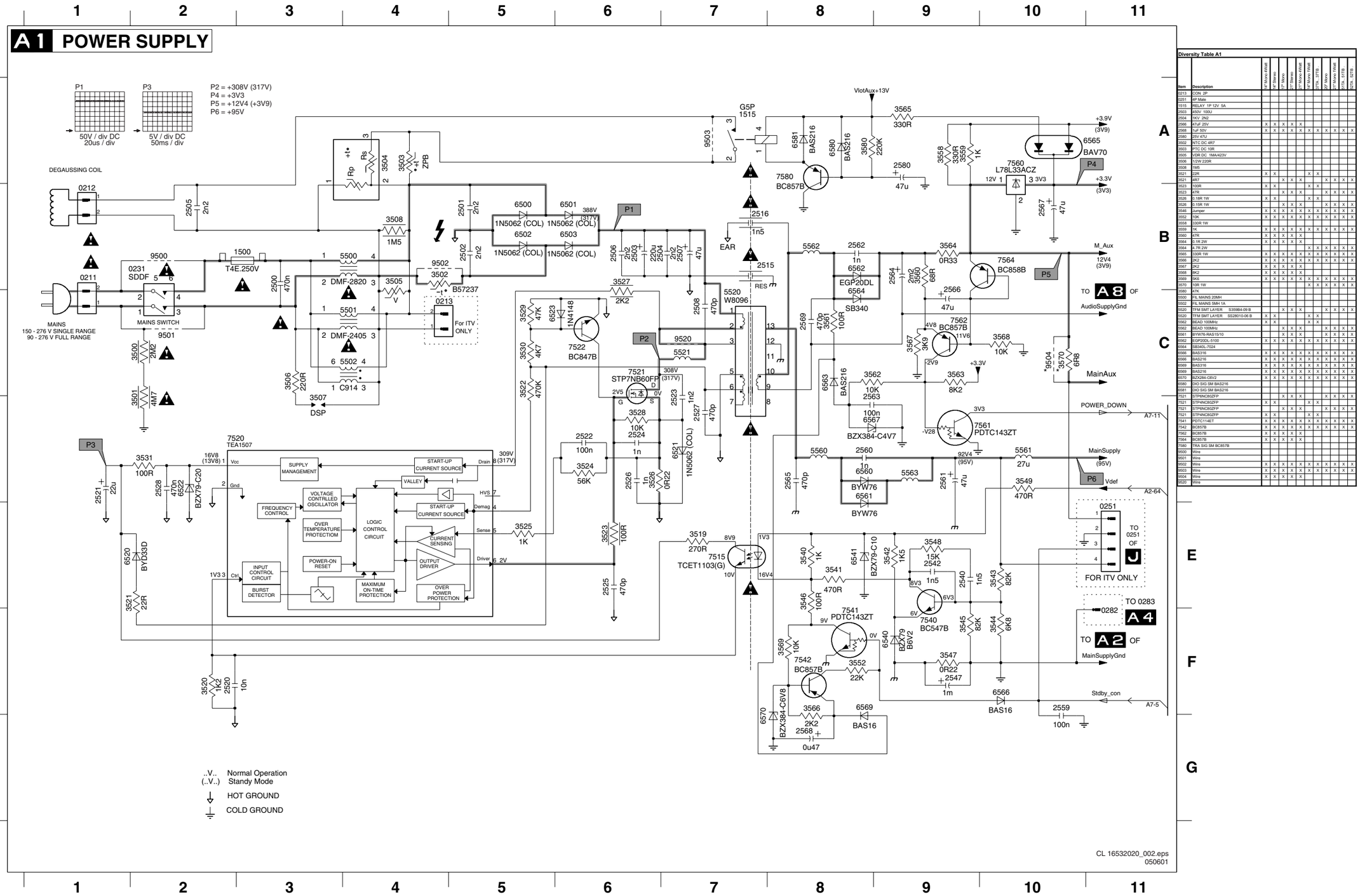

Diversity Table A1

Item	Description	8" Mono White	8" Stereo	17" Mono	17" Stereo	17" Mono+Wire	17" Stereo+Wire	27" Mono	27" Mono +Wire	32in. 16:9	32in. 4:3 16
0213	CON 2P										
0251	4P Male										
1515	RELAY 1P 12V 5A										
2503	450V 100U										
2504	1KV 2N2										
2566	47uF 25V	X	X	X	X	X	X				
2568	1uF 50V	X	X	X	X	X	X	X	X	X	X
2580	25V 47U										
3502	NTC DC 4R7										
3503	PTC DC 10R										
3505	VDR DC 1MA423V										
3506	12W 220R										
3508	1M5										
3521	22R	X	X				X	X			
3521	4R7			X	X	X			X	X	X
3523	100R	X	X				X	X			
3523	47K			X	X	X			X	X	X
3528	0.18R 1W	X	X				X	X			
3528	0.15R 1W			X	X	X			X	X	X
3546	Jumper	X	X	X	X	X	X	X	X	X	X
3552	10K	X	X	X	X	X	X	X	X	X	X
3558	330R 1W										
3559	1K	X	X	X	X	X	X	X	X	X	X
3560	47R	X	X	X	X	X					
3564	0.1R 2W	X	X	X	X	X					
3564	4.7R 2W						X	X	X	X	X
3565	330R 1W	X	X	X	X	X	X	X	X	X	X
3566	2K2	X	X	X	X	X	X	X	X	X	X
3567	2K2	X	X	X	X	X					
3568	8K2	X	X	X	X	X					
3569	5K6	X	X	X	X	X	X	X	X	X	X
3570	10R 1W						X	X	X	X	X
3580	47K										
2500	FIL MAINS 20MH										
5002	FIL MAINS 5MH 1A										
5020	TFM SMT LAYER S3598A-09 B			X	X	X			X	X	X
5020	TFM SMT LAYER S5280I10-06 B						X	X			
5062	BEAD 100MHz	X	X				X	X			
5062	BEAD 100MHz			X	X	X			X	X	X
6061	BYW76-RAS15/10			X	X	X			X	X	X
6062	EGP20DL-5100	X	X	X	X	X	X	X	X	X	X
6064	SB340L-7024										
6066	BAS316	X	X	X	X	X	X	X	X	X	X
6066	BAS216	X	X	X	X	X	X	X	X	X	X
6069	BAS316	X	X	X	X	X	X	X	X	X	X
6069	BAS216	X	X	X	X	X	X	X	X	X	X
6070	BZX284-C6V2	X	X	X	X	X	X	X	X	X	X
6080	DIO SIG SM BAS216										
6081	DIO SIG SM BAS216										
7521	STP6NC60ZFP			X	X	X			X	X	X
7521	STP4NC60ZFP	X	X				X	X			
7521	STP6NC60ZFP			X	X	X			X	X	X
7521	STP4NC60ZFP	X	X				X	X			
7541	PDTC114ET	X	X	X	X	X	X	X	X	X	X
7542	BC857B	X	X	X	X	X	X	X	X	X	X
7562	BC857B	X	X	X	X	X					
7564	BC857B	X	X	X	X	X					
7580	TRA SIG SM BC857B										
9500	Wire										
9501	Wire										
9502	Wire	X	X	X	X	X	X	X	X	X	X
9503	Wire	X	X	X	X	X	X	X	X	X	X
9504	Wire	X	X	X	X	X					
9520	Wire										