Power supply / Stromversorgung / Alimentation

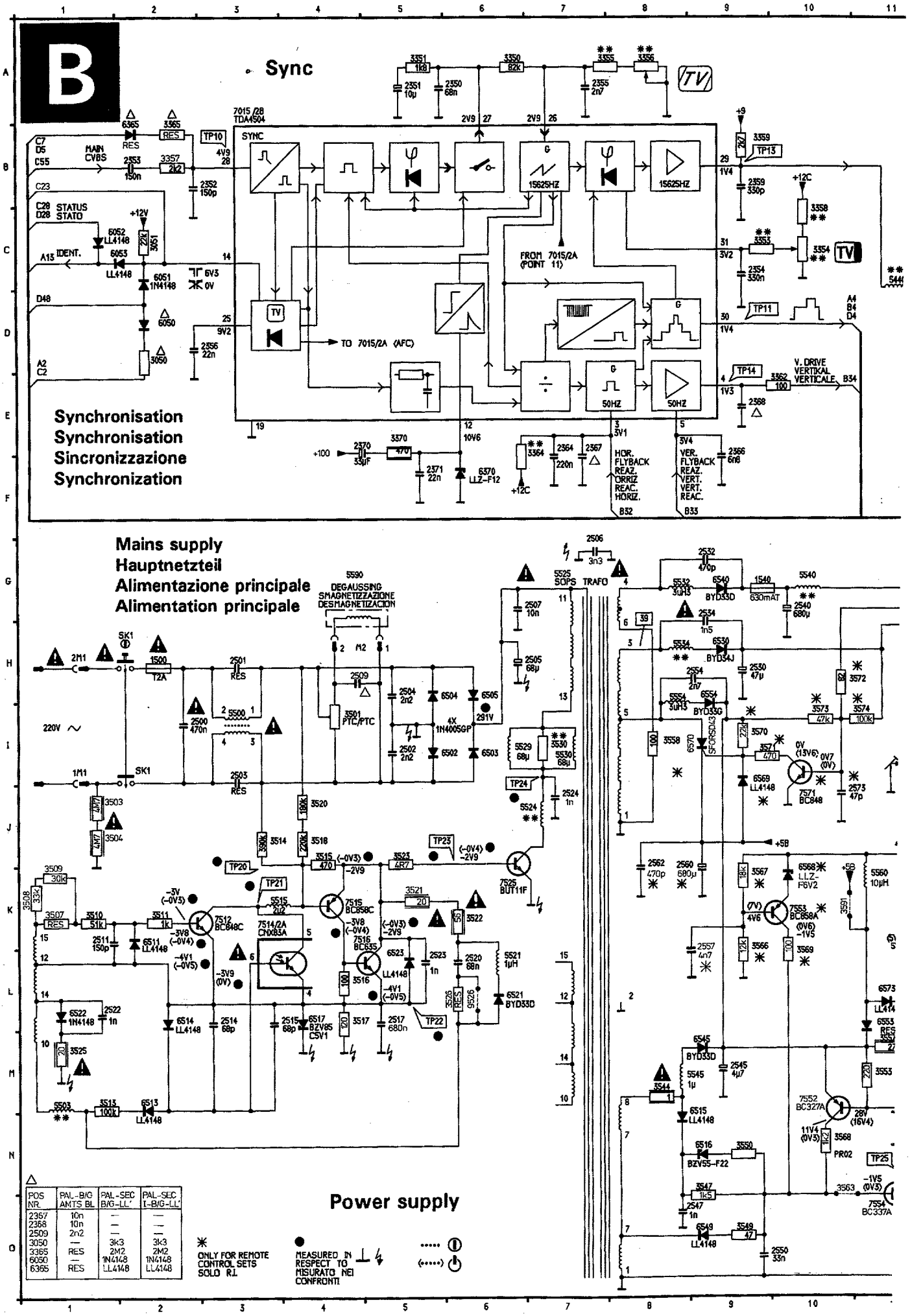

POS NR.	PAL-B/G AMTS BL	PAL-SEC B/G-LL'	PAL-SEC I-B/G-LL'
2367	10n	—	—
2368	10n	—	—
2509	2n2	—	—
3050	—	3k3	3k3
3365	RES	2M2	2M2
6050	—	1N4148	1N4148
6365	RES	LL4148	LL4148

△

✱ ONLY FOR REMOTE CONTROL SETS SOLO R.I.

● MEASURED IN RESPECT TO MISURATO NEI CONFRONTI