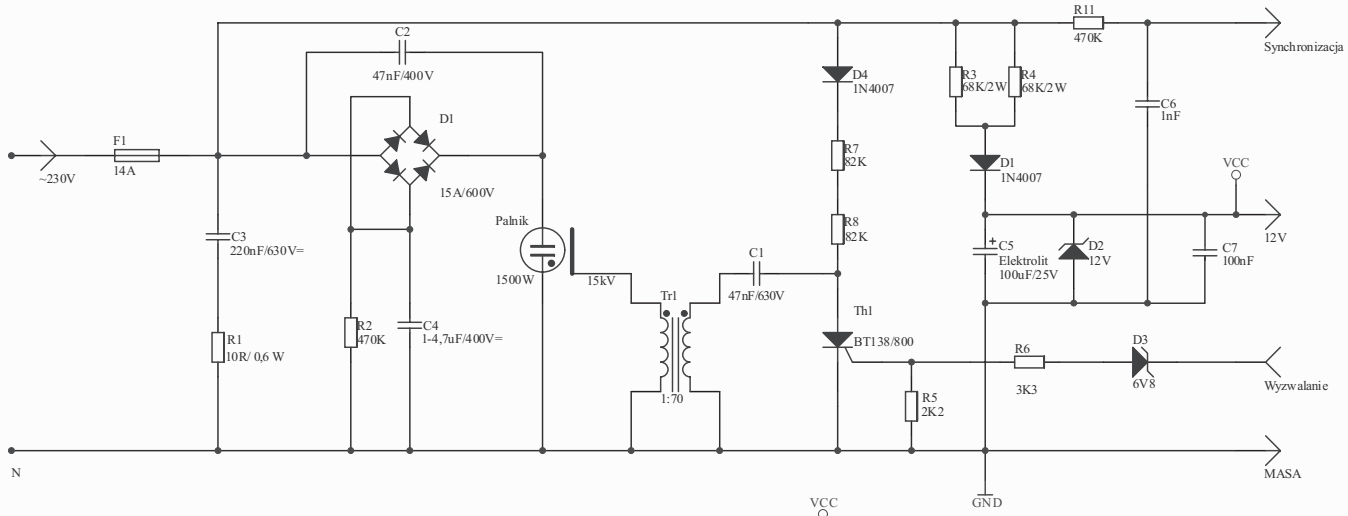

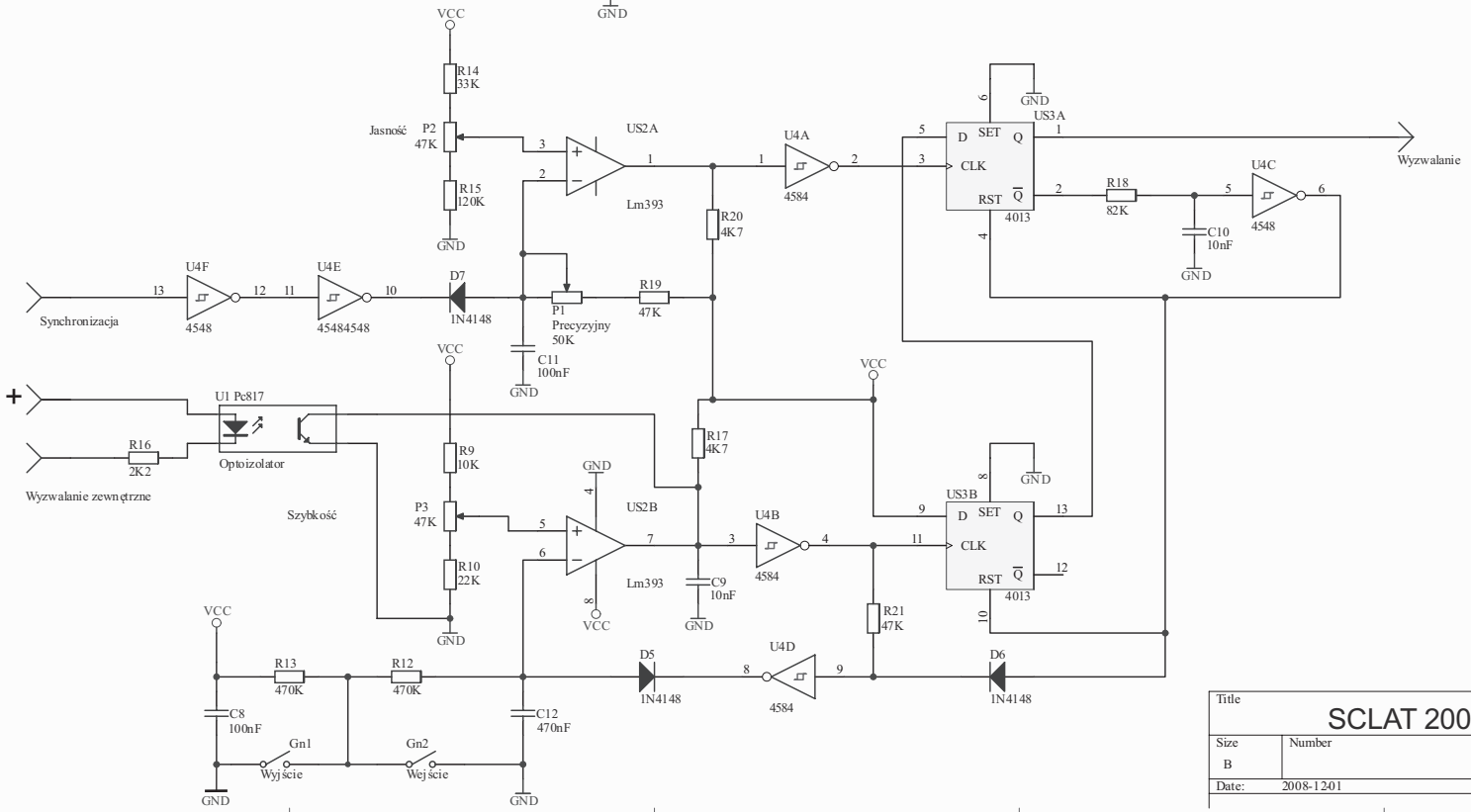

Title		
SCLAT 2000 1500W		
Size B	Number	Revision
Date: 2008-12-01	Sheet of	
	Drawn By: allbert10	