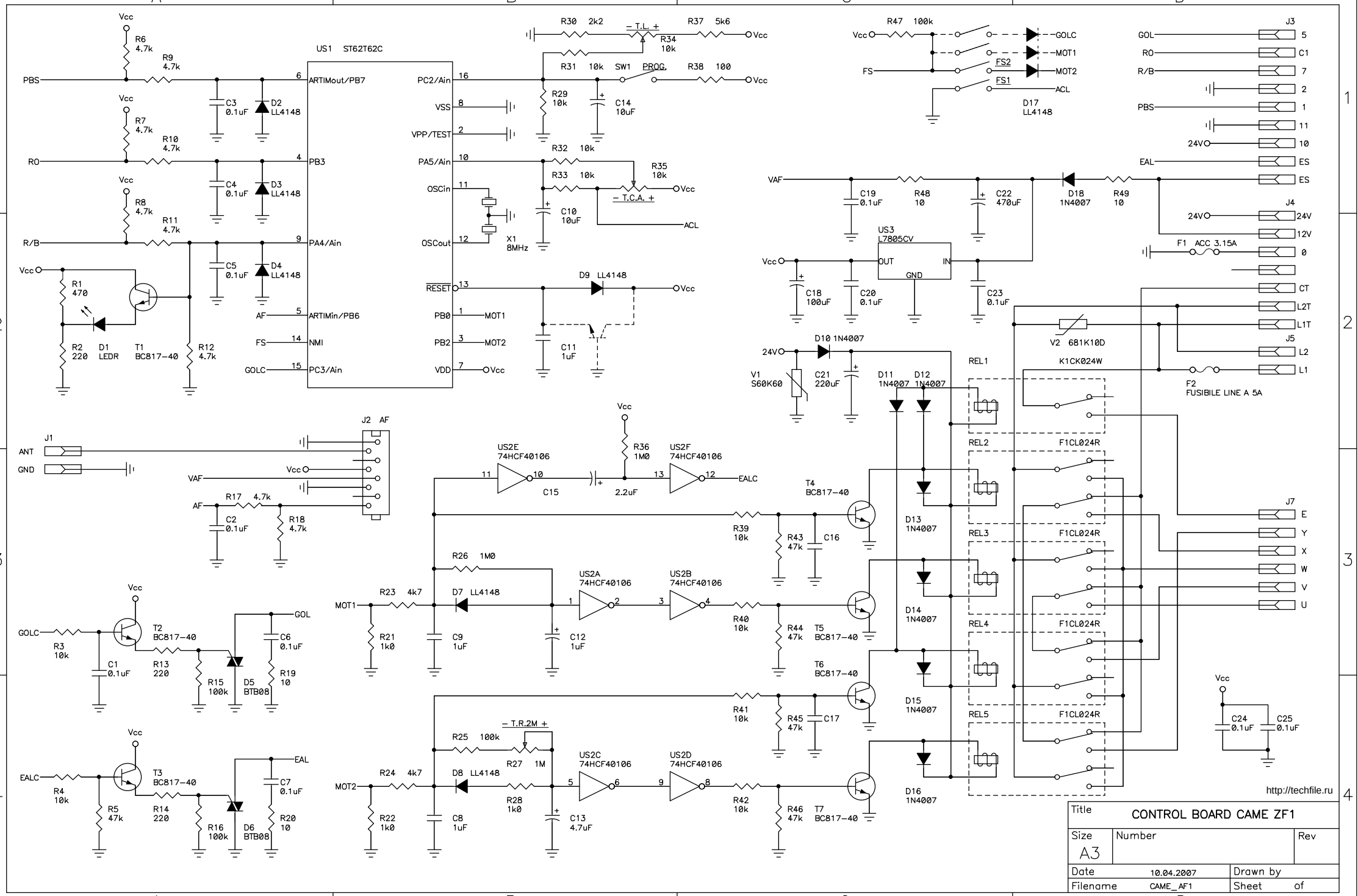
US1 ST62T62C
ARTIMout/PB7
PB3
PA4/Ain
ARTIMin/PB6
NMI
PC3/Ain
PC2/Ain
VSS
VPP/TEST
PA5/Ain
OSCin
OSCout
RESET
PB0
PB2
VDD
MOT1
MOT2
X1 8MHz
PBS
RO
R/B
AF
FS
GOLC
EALC
EAL
ACL
GOL
VAF
24V
ANT
GND
J1
J2 AF
J3
J4
J5
J7
F1 ACC 3.15A
F2 FUSIBILE LINE A 5A
V1 S60K60
V2 681K10D
US3 L7805CV
OUT
IN
GND
REL1
REL2
REL3
REL4
REL5
K1CK024W
F1CL024R
T1 BC817-40
D1 LEDR
T2 BC817-40
T3 BC817-40
T4 BC817-40
T5 BC817-40
T6 BC817-40
T7 BC817-40
D5 BTB08
D6 BTB08
US2E 74HCF40106
US2F 74HCF40106
US2A 74HCF40106
US2B 74HCF40106
US2C 74HCF40106
US2D 74HCF40106
– T.L. +
– T.C.A. +
– T.R.2M +
SW1 PROG.
FS2
FS1
D17 LL4148
D18 1N4007
D10 1N4007
D11 1N4007
D12 1N4007
D13 1N4007
D14 1N4007
D15 1N4007
D16 1N4007
http://techfile.ru
Title
CONTROL BOARD CAME ZF1
Size
A3
Number
Rev
Date
10.04.2007
Drawn by
Filename
CAME_AF1
Sheet
of