5-3
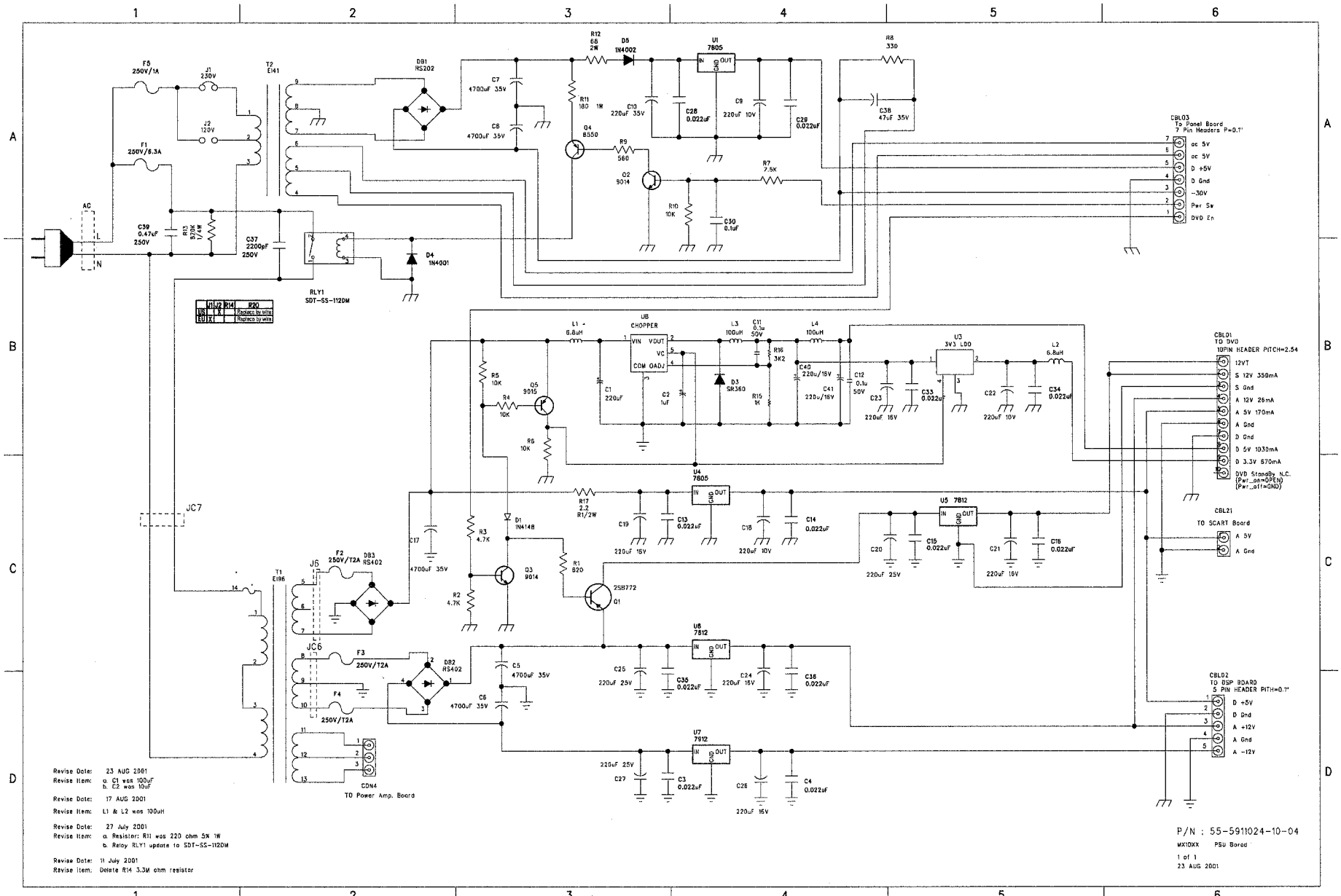
# CIRCUIT DIAGRAM